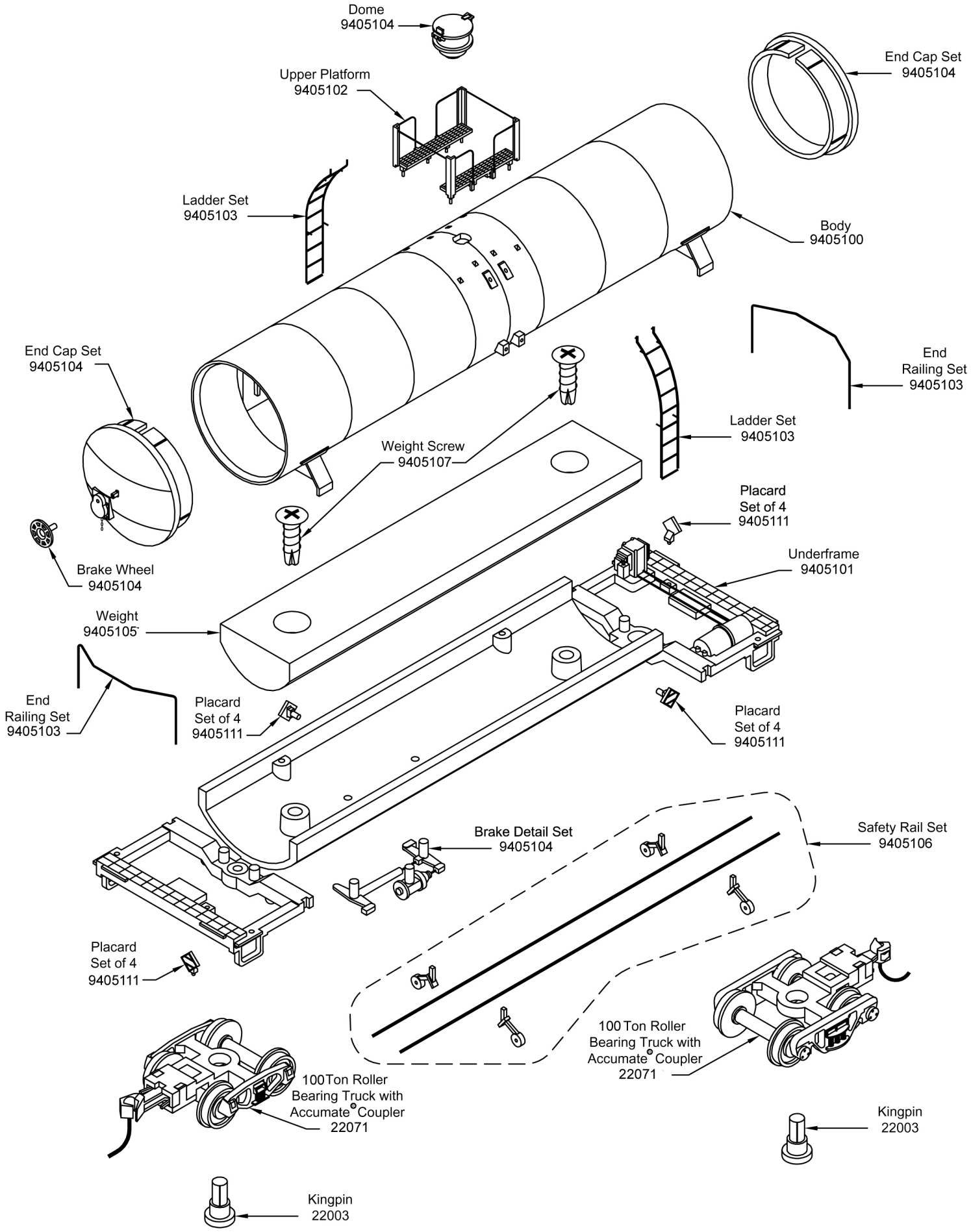#40500 SERIES - N 17,360 GALLON TANK CAR