6931 SWITCH SIGNAL WIRING THE ADVANCED FEATURES

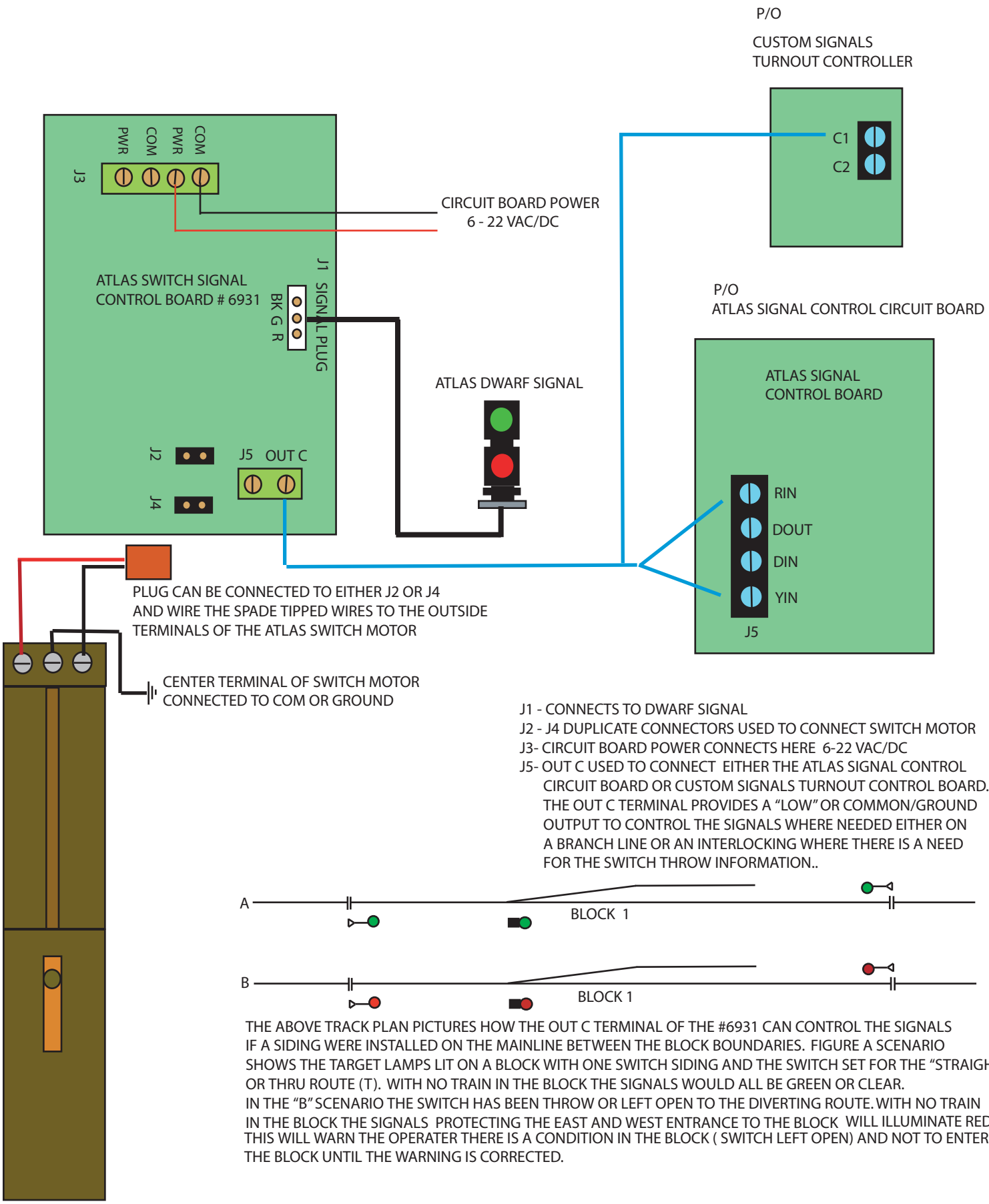

J1 - CONNECTS TO DWARF SIGNAL
J2 - J4 DUPLICATE CONNECTORS USED TO CONNECT SWITCH MOTOR
J3- CIRCUIT BOARD POWER CONNECTS HERE 6-22 VAC/DC
J5- OUT C USED TO CONNECT EITHER THE ATLAS SIGNAL CONTROL CIRCUIT BOARD OR CUSTOM SIGNALS TURNOUT CONTROL BOARD. THE OUT C TERMINAL PROVIDES A "LOW" OR COMMON/GROUND OUTPUT TO CONTROL THE SIGNALS WHERE NEEDED EITHER ON A BRANCH LINE OR AN INTERLOCKING WHERE THERE IS A NEED FOR THE SWITCH THROW INFORMATION..

THE ABOVE TRACK PLAN PICTURES HOW THE OUT C TERMINAL OF THE #6931 CAN CONTROL THE SIGNALS IF A SIDING WERE INSTALLED ON THE MAINLINE BETWEEN THE BLOCK BOUNDARIES. FIGURE A SCENARIO SHOWS THE TARGET LAMPS LIT ON A BLOCK WITH ONE SWITCH SIDING AND THE SWITCH SET FOR THE "STRAIGHT" OR THRU ROUTE (T). WITH NO TRAIN IN THE BLOCK THE SIGNALS WOULD ALL BE GREEN OR CLEAR.
IN THE "B" SCENARIO THE SWITCH HAS BEEN THROW OR LEFT OPEN TO THE DIVERTING ROUTE. WITH NO TRAIN IN THE BLOCK THE SIGNALS PROTECTING THE EAST AND WEST ENTRANCE TO THE BLOCK WILL ILLUMINATE RED. THIS WILL WARN THE OPERATER THERE IS A CONDITION IN THE BLOCK (SWITCH LEFT OPEN) AND NOT TO ENTER THE BLOCK UNTIL THE WARNING IS CORRECTED.