Basic DCC Wiring for Mainline Control Panel of Atlas Layout HO-35

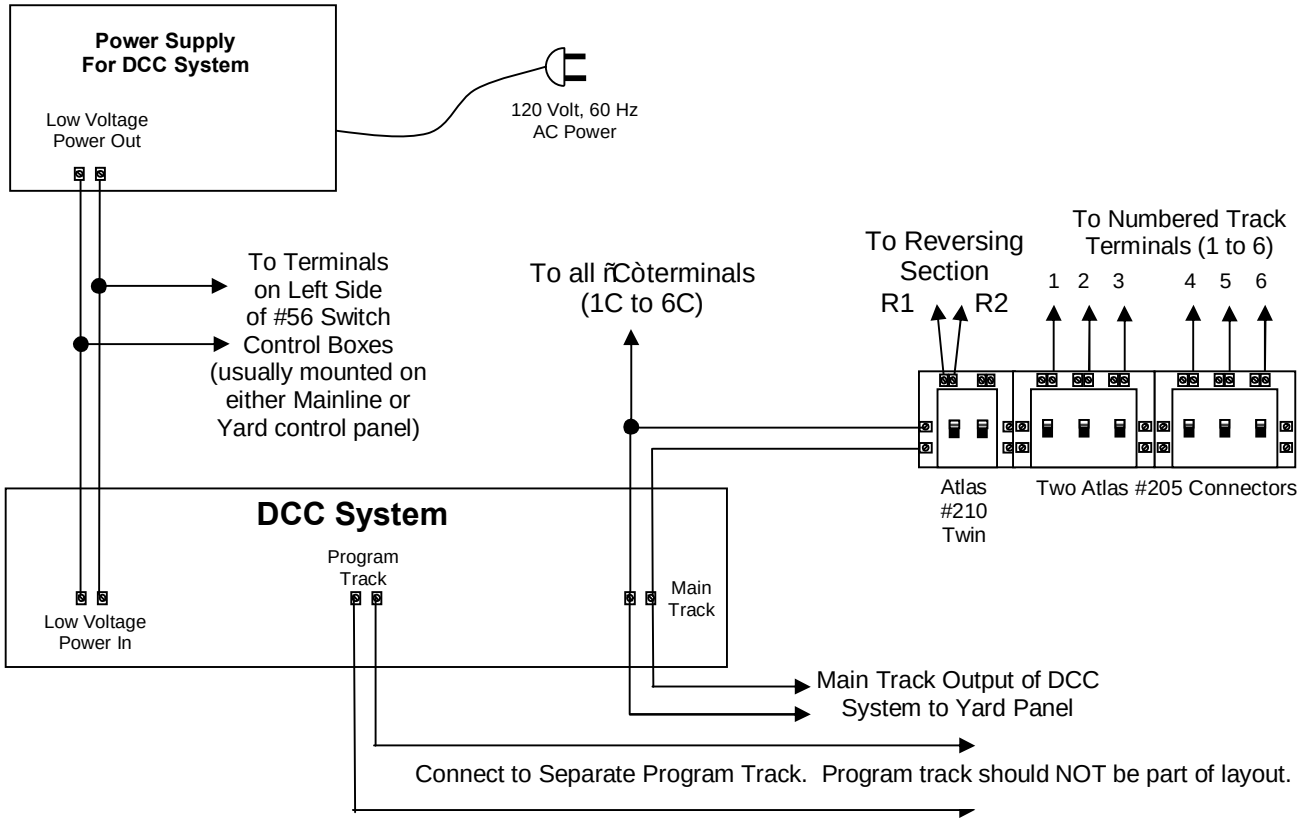

JHM 05/05/2011