Basic DCC Wiring for Atlas Layout HO-2

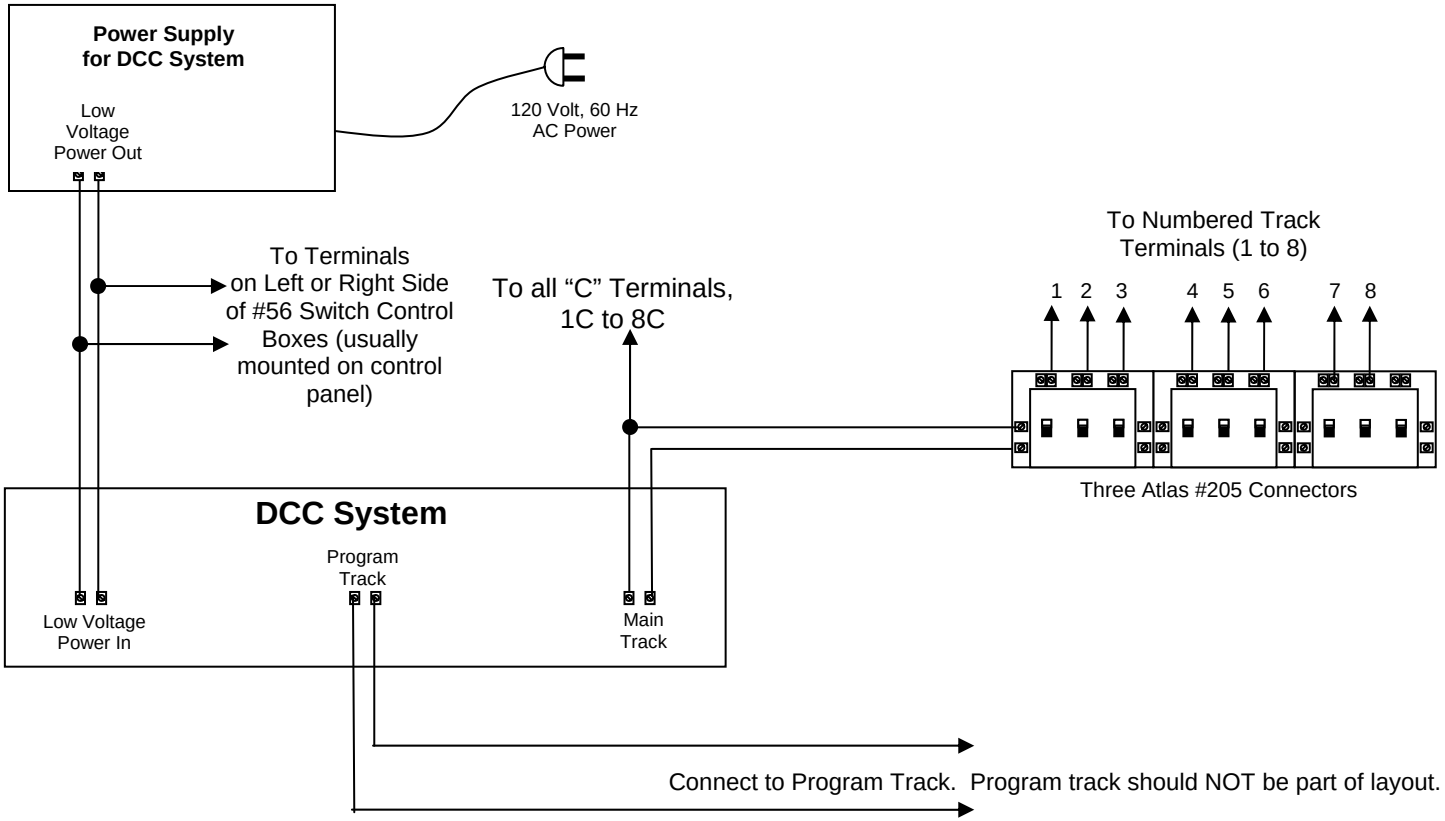

12/20/2010