Basic DCC Wiring for Atlas Layout N-1

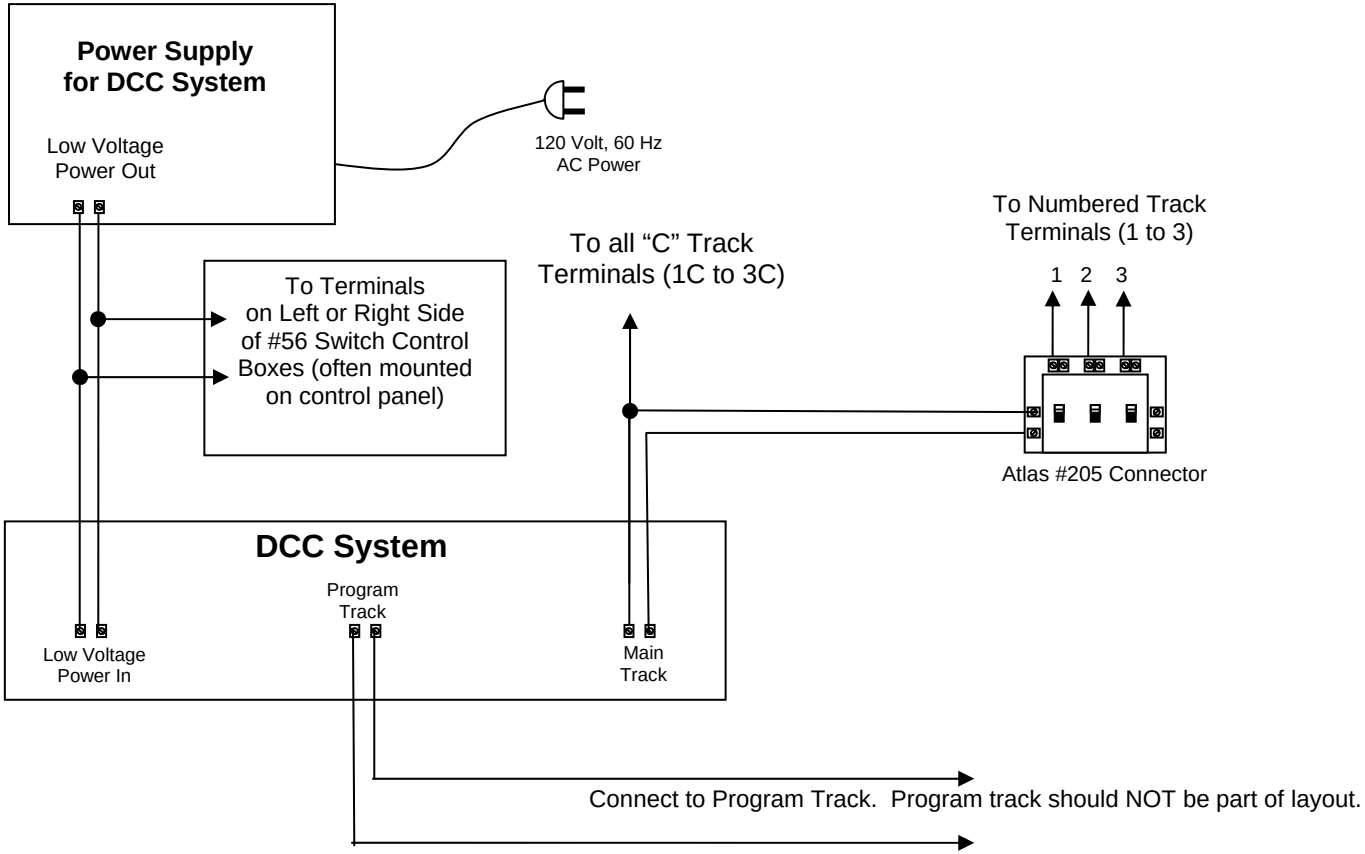

JHM 02/24/2011