DASH 8 40-C DIESEL LOCO W/ SOUND H0 SCALE

ORDER PARTS

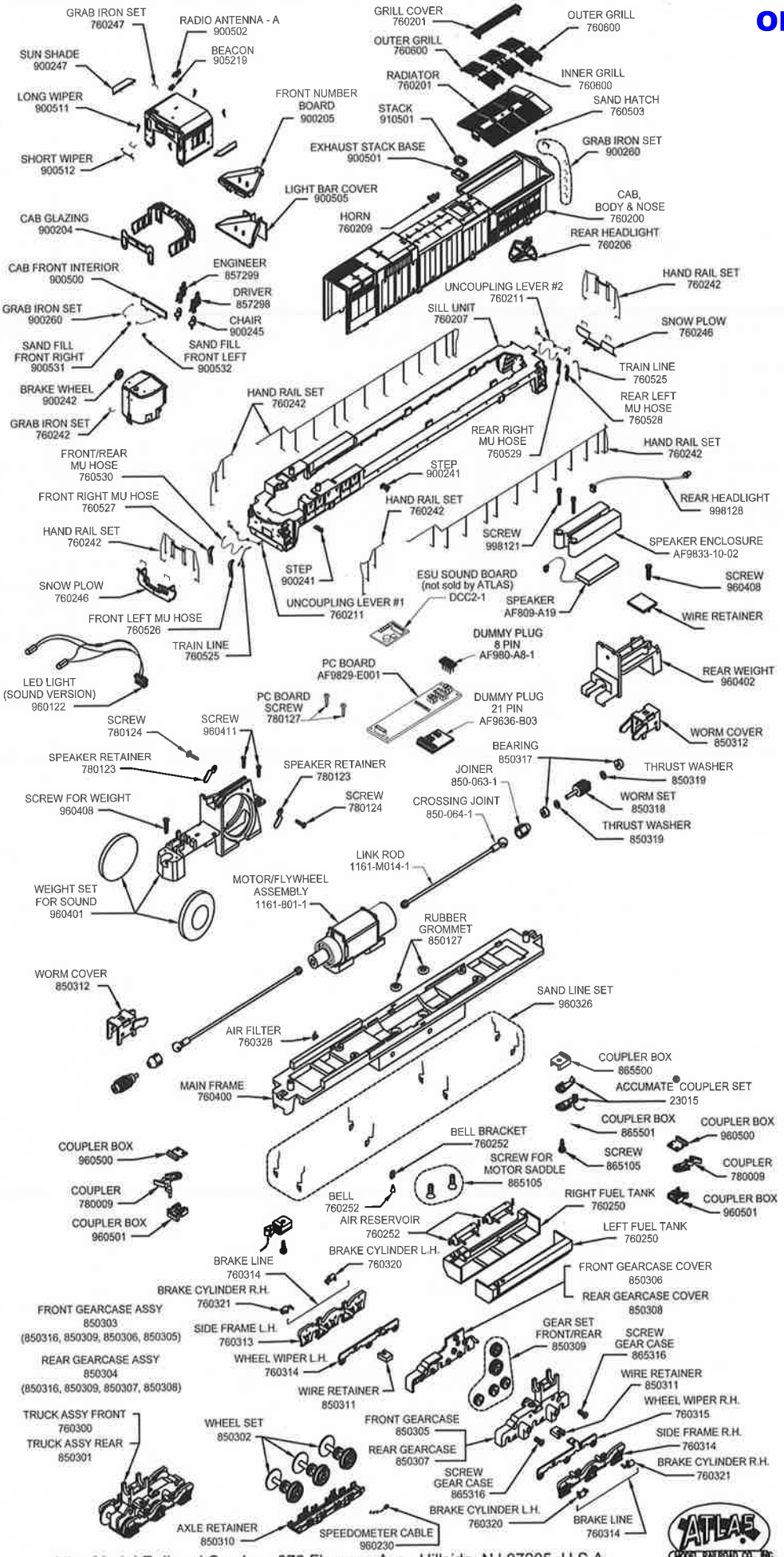

Atlas Model Railroad Co., Inc. • 378 Florence Ave. • Hillside, NJ 07205 • U.S.A.

1162-PI08