3 BAY CYLINDRICAL HOPPER 3 RAIL

ORDER PARTS

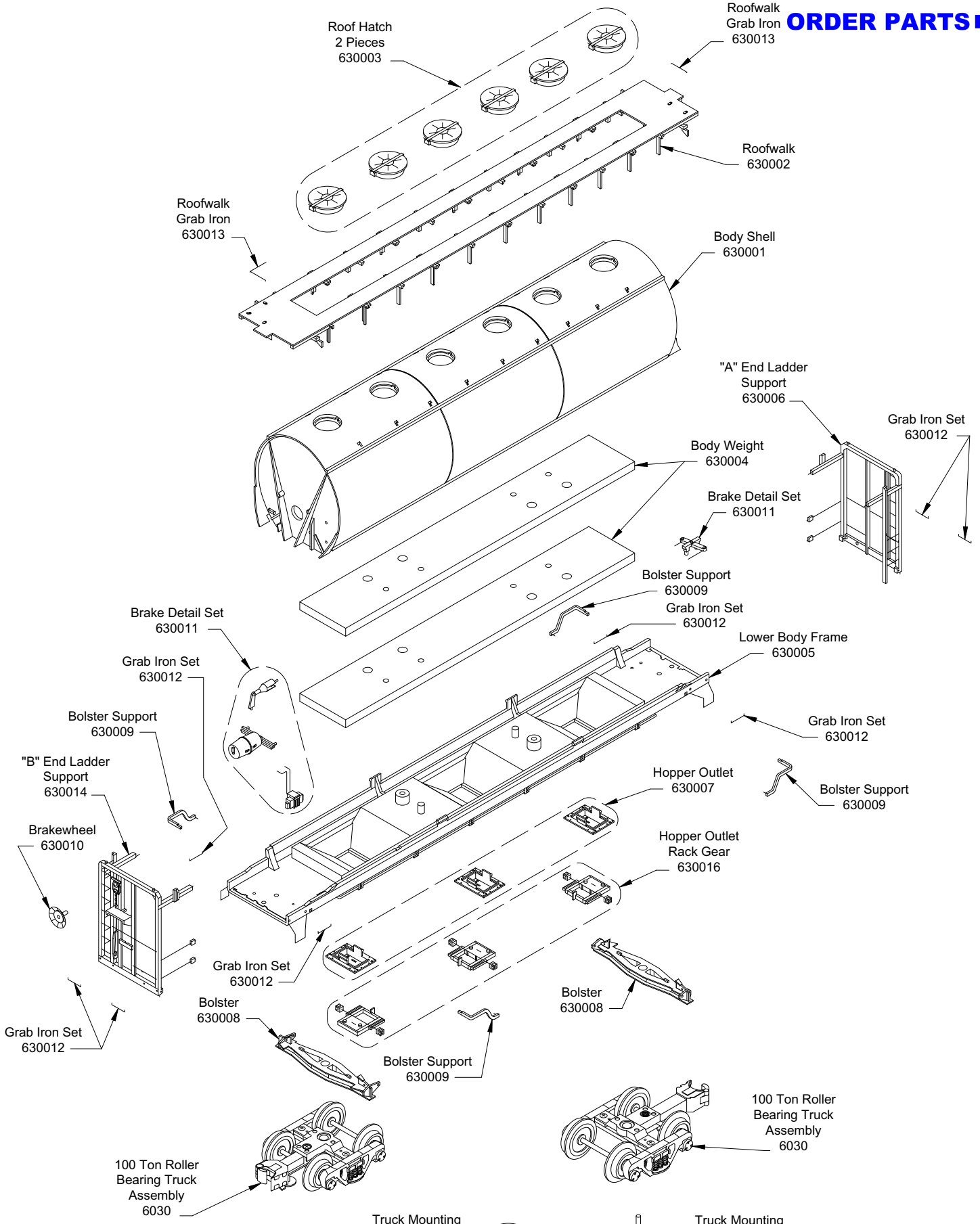

378 Florence Avenue, Hillside, New Jersey 07205, USA