ORDER PARTS

6 BAY CYLINDRICAL HOPPER 2 RAIL

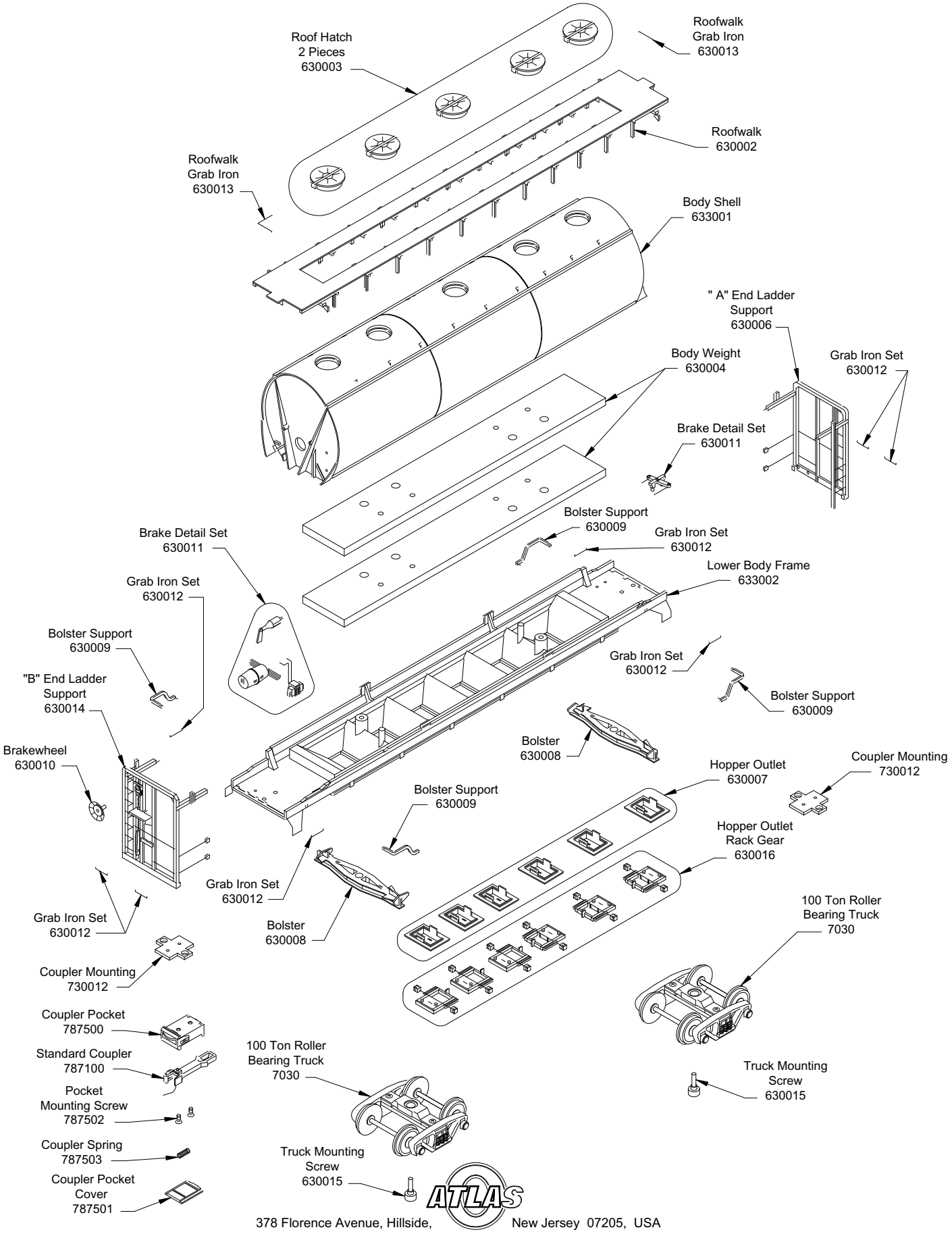

378 Florence Avenue, Hillside, New Jersey 07205, USA