N, HO & O Scales

ATLAS®
MODEL RAILROAD CO., INC.

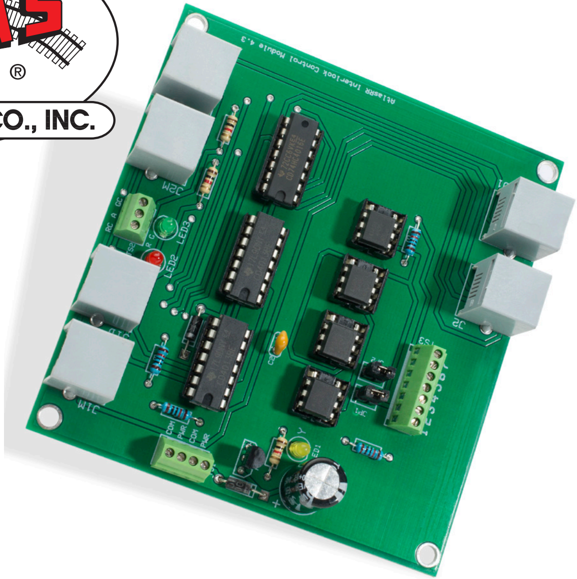

Atlas All Scales Signal System™

Interlock Control Module Installation Manual

TABLE OF CONTENTS

INTRODUCING THE ATLAS INTERLOCK CONTROL MODULE

The basic components of the Atlas All-Scales Signal System provide the model railroader with a highly configurable absolute block signal (ABS) system. On the prototype, ABS signaling keeps trains from colliding with each other by regulating the speeds at which trains may travel over designated areas of track (blocks) so that two trains do not occupy the same region or block of track at the same time. Speed regulation and accompanying signal "aspects" are set based on each prototype's rulebook and track configurations so that trains can travel safely at the best possible speed over the entire rail system.

When a train comes to a turnout ("switch"), however, there is another component to proper signaling that needs to be considered to protect a train from collision. First, the position of the turnout or series of turnouts needs to be relayed to the train crew so they know which route the train is to take. Second, if the train is going to be crossing tracks or occupying tracks that another train could possibly be on, there needs to be a way to stop any oncoming trains from entering the area by using signals until the first train has completed its' route across the common trackage. Such a situation is called an "Interlocking" on the prototype, as the turnouts and related signals must be locked together to permit the safe movement of the train while keeping other trains off the route. Once a train has cleared the area, the switches and signals are then able to be released and routes reconfigured to let other trains occupy the tracks appropriately.

The Atlas Interlock Control Module adds this advanced capability of "route-based signaling" to the All Scales Signal System by interfacing between a turnout and Atlas Universal Signal Control Boards to report the turnout position and set the proper aspects of all affected signals. This installation manual will show you how to connect and set up the board for a simple turnout and siding. For more complex interlocking track schemes and signal configurations, please refer to the signaling documentation on the Atlas website, https://shop.atlasrr.com/t-manuals.aspx

A CLOSER LOOK AT THE INTERLOCK CONTROL MODULE

This manual assumes that you are already familiar with the basic operation of the Atlas All Scales Signal System and have installed and configured a network of Universal Signal Control Boards with attached signals. This module is not a stand-alone product – it requires an appropriate turnout, Atlas Universal Signal Control Boards (70 000 046), signals, and cabling to function. Please refer to the Advanced Signal Guide and the Basic Operation Manual included with the Universal Signal Control Board (hereinafter referred to as a USCB) for information to set up a standard signal network if you have not done so previously. Both of these manuals are available on the Atlas website, https://shop.atlasrr.com/t-manuals.aspx

Figure 1 (page 4) shows the basic layout of the Interlock Control Module. You will notice the familiar Atlas cable connecting jacks, terminal blocks, and jumpers in addition to three status LEDs. Please read through the descriptions below to familiarize yourself with how these items are used on the Interlock Control Module before connecting anything to the board.

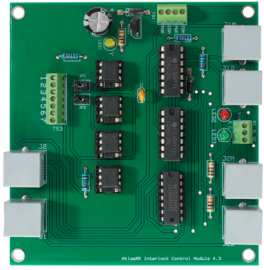

FIGURE 1 - BASIC LAYOUT OF THE INTERLOCK CONTROL MODULE

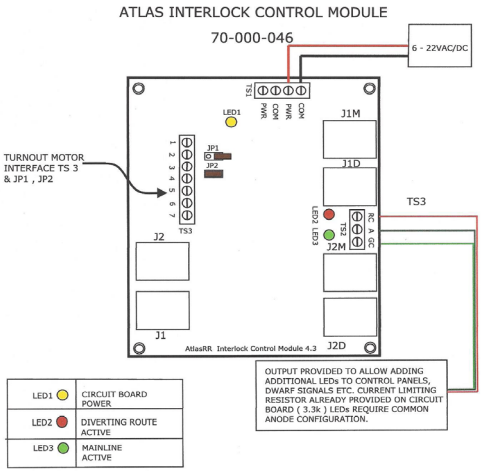

LED1	CIRCUIT BOARD POWER
LED2	DIVERTING ROUTE ACTIVE
LED3	MAINLINE ACTIVE

TERMINAL BLOCKS (TS) AND JUMPERS (JP)

TS1 is the power input / through section for the board. As with the Atlas Universal Signal Control Board (USCB), power input can be 6-22 V AC or DC, and should be connected to a pair of terminals (COM and PWR) on TS1. The second pair of terminals allows for "daisy-chaining" a power source to or from additional signal system products. When external power is connected properly and switched on, LED 1 will light.

TS2 is an output for remote LEDs / panel lights and reflects the direction an attached turnout is thrown. Remote LEDs should be wired in a common anode configuration and should not require additional resistors for operation. The Red and Green LEDs 2 and 3 on the circuit board duplicate the information provided on this output and are useful in setting up the proper turnout indications and for debugging configuration issues which may arise.

TS3 is the Turnout Motor Interface, a 7-pin block used for attaching wires from a turnout. In conjunction with the settings of jumpers JP1 and JP2, many different types of turnouts are supported. Please see the detailed information in Figure 2 (page 8) for wiring to this block and setting the jumpers appropriately for the turnouts you are using.

CABLE CONNECTING JACKS (J)

IMPORTANT NOTE: All jacks on the Interlock Control Module utilize Atlas SCB interconnect cable wiring (70 000 057, 70 000 058, 70 000 059) to connect to Atlas USCBs. You should NEVER try to connect a signal or Signal Attachment Cable (70 000 050) directly to these jacks!

J1 and J2 should be connected to the existing signal network. These jacks connect to the USCBs controlling the signals in the blocks immediately PRECEDING or FOLLOWING the interlocked turnout as shown in the example diagrams.

J1M/J1D are to be connected to the USCBs controlling the signals located at the turnout for the main and diverging routes AS VIEWED APPROACHING THE FACING POINT OF THE TURNOUT, such as the case when one track splits into two possible routes. J1M connects to the USCB controlling the signal for the normal or main ("M") route through the turnout, while J1D connects to the USCB controlling the signal for the diverging ("D") route through the turnout. Which way main and diverging routes are defined by your particular track configuration is up to you, but M is usually the straight route through the turnout, and will be considered as such in this manual.

J2M/J2D are to be connected to the USCBs controlling the signals at the turnout located on the independent main and diverging routes AS VIEWED APPROCHING FROM THE TRAILING POINT OF THE TURNOUT, such as the case when two tracks merge into one at the end of a siding. J2M connects to the USCB controlling the signal for the main ("M") route, and J2D to the USCB controlling the signal for the diverging ("D") route.

WIRING THE TURNOUT MOTOR INTERFACE

There are two main classes of turnout (switch) motors that are commonly used in model railroading in addition to manual control. First is the twin-coil type of motor as used in Atlas Remote turnouts and many others. Second is the stall motor type found in the Tortoise or Cobalt switch machines. These machines provide connections and electrical "feedback" which can be interpreted to indicate the direction in which an attached turnout is thrown. When using a non-powered manual ground throw with attached contacts or using the relay outputs from an Atlas Snap Relay (#200) or a Tortoise switch machine, the circuit that is completed when the relay moves between the two positions also can be used to indicate the turnout position. This is referred to as "contact closure" in Figure 2 (page 8).

Figure 2 (page 8) shows the proper wiring to use and associated jumper settings for each of these three cases. Notice that turnout motors such as the Atlas Deluxe Under Table Switch Machine (#66) and Tortoise have multiple ways they can be wired to operate with the Interlock Control Module, so you can choose the best solution to complement your existing wiring needs.

FIGURE 2 - WIRING THE TURNOUT MOTOR INTERFACE

ATLAS INTERLOCK CONTROL MODULE
SWITCH MACHINE WIRING
70- 000- 047

TWIN COIL TYPE MOTORS

ATLAS CUSTOM SUPREME SWITCH TRACKS

ATLAS # 6099 SWITCH MOTOR

ATLAS DELUXE UNDER TABLE # 65 & 66 SWITCH MOTORS

ALL ATLAS REMOTE SWITCH MOTORS

PECO,NJI,TENSHODO TWIN COIL SWITCH MOTORS.

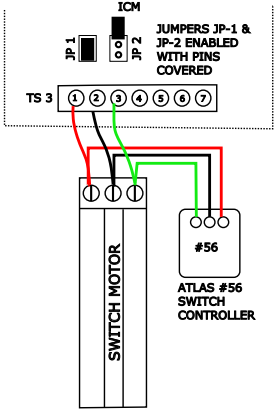

STALL SWITCH MOTORS

COBALT

SWITCHCRAFT

TORTOISE

WALTHERS

COBALT

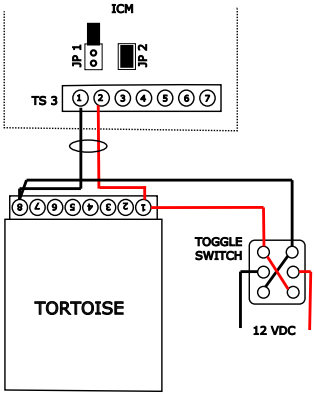

CONTACT CLOSURE

UTILIZING SPARE CONTACT SETS AVAILABLE WITH SWITCH MOTORS FROM ATLAS, WALTHERS TORTOISE ETC,

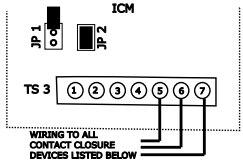

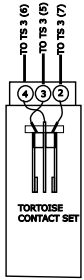

PART OF TORTOISE SWITCH MOTOR

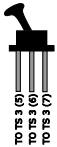

CABOOSE IND. GROUND THROW # 220-S

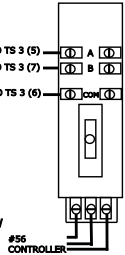

ATLAS #200 SNAP RELAY #65 & 66 DELUXE UNDER TABLE TURNOUT MOTORS

INSTALLING THE INTERLOCK CONTROL MODULE

As with the Atlas USCB, each Interlock Control Module should be attached underneath the layout using the included standoffs and screws near where the actual interlock is located for convenience in configuration and minimizing wire lengths to the turnout motor.

Connect the wires from the turnout as appropriate and set JP1 and JP2 accordingly. Attach power wiring to the board and before connecting the Interlock Control Module to any USCBs with signals, turn on the power. The yellow status LED should light, and one of the turnout direction LEDS should be illuminated. Check to see that the turnout directions correspond to the proper indicator LED for your specific definition of "Main" and "Diverging" as mentioned above by cycling the turnout a few times and noting which LED is illuminated for each turnout position. If these are reversed for your application, turn off the power and check the wiring from the turnout or turnout controller and make any changes necessary to have the green and red LEDs correctly reflect the "Main" and "Diverging" states of the turnout before proceeding.

Once these are correct, if you are wiring remote LEDs / panel lights to TS2, turn off the power, attach these wires now, and re-test. If all is well, Congratulations! You now have configured a basic turnout position indicator as a bonus! Now, turn off the power, connect the SCB Interconnect cables to the appropriate USCBs for the required signals, and turn the power back on. You should now have a working set of signals protecting the routes your train can take.

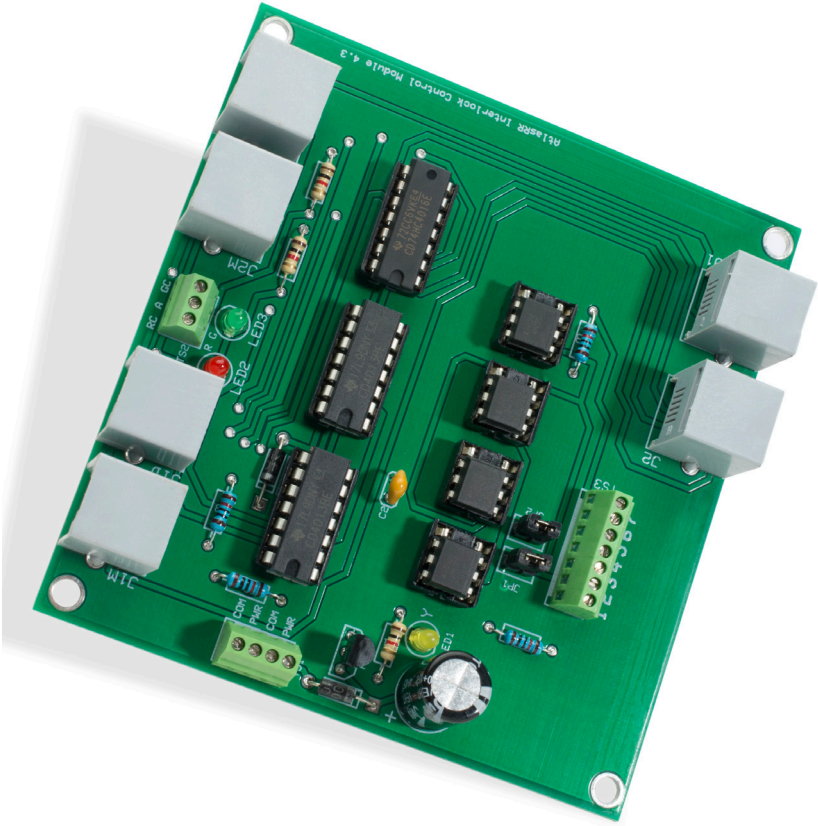
Atlasrr Interlock Control Module 4.3
J2M
J1M
J2
J3
LED2
LED3
LED1
C2
C3
JP1
JP2
D1
CON
PWR
CON
PWR
RC A GC
R G
S2

SIGNAL INTERLOCK EXAMPLE – BASIC TURNOUT / STUB END SIDING

Let's look at a basic element of an interlocking situation – a simple turnout with a main and diverging route. This could be a simple siding or a set of signals protecting the point where a branch line meets up with a main line.

Figure 3 (page 12) shows a prototypical Interlocking Diagram for this situation based on the style originally developed by General Railway Signal (GRS), now Alstom Transport. We will utilize this style of schematic to illustrate track and signal configuration.

For the basic example shown, when approaching the turnout from the facing point direction, the two-headed signal indicates the route set by the turnout with the main line shown on the top head (2) and the diverging route on the bottom head (3). If the blocks beyond the turnout are clear, the mast should indicate green over red if the turnout is lined for the main, or red over green if the turnout is lined for the diverging route. Similarly, if approaching the trailing point of the turnout from either the main (1) or diverging (1A) route, the single head on each route will show whether the turnout is lined with or against the route – green if the turnout is lined with the route, and red if against. If blocks beyond the turnout are occupied, this will also affect the aspect shown on the signals!

Figure 4 (page 13) is the Atlas All Scales Signal System wiring layout for this schematic that will allow you fully reproduce this prototypical signal behavior on your layout. Further examples of common track configurations, interlock schematics, and wiring diagrams are available on the Atlas website, https://shop.atlasrr.com/t-manuals.aspx to help you design signal configurations based on your specific needs.

FIGURE 3 - EXAMPLE OF A PROTOTYPICAL INTERLOCKING DIAGRAM FOR A SIMPLE TURNOUT

SINGLE SIDING

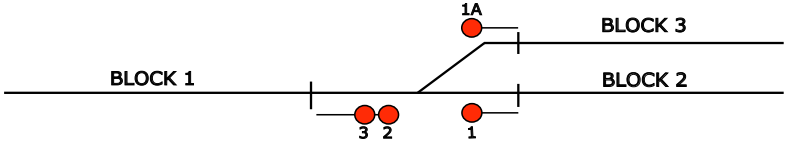

FIGURE 4 - WIRING LAYOUT SCHEMATIC – SINGLE TURNOUT (LH)

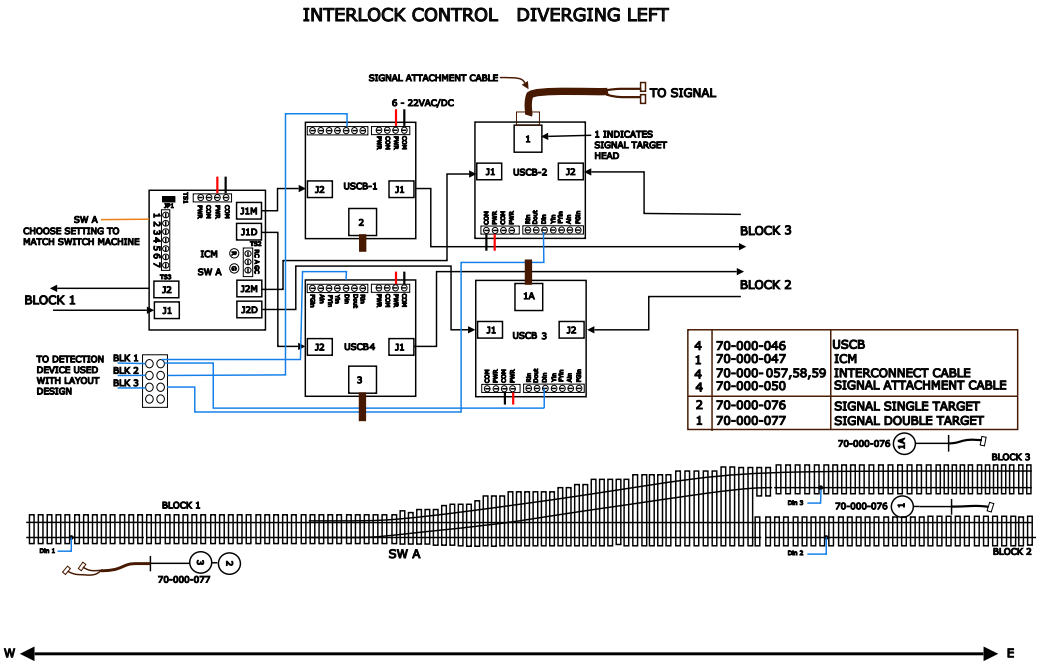

4	70-000-046	USCB
1	70-000-047	ICM
4	70-000- 057,58,59	INTERCONNECT CABLE
4	70-000-050	SIGNAL ATTACHMENT CABLE
2	70-000-076	SIGNAL SINGLE TARGET
1	70-000-077	SIGNAL DOUBLE TARGET

Model railroad signaling is something which will greatly enhance the realism and operational interest of your layout. It can be as simple as one fixed signal protecting a siding or stretch of single-track mainline, or an integrated system of many signals controlling not only speed but route selection.

The Atlas All Scales Signal System is designed to address many prototypical situations that you can model. You can find additional information, including a complete listing of available signals and accessories plus our Basic & Advanced Signal Guides on our website at www.atlasrr.com.

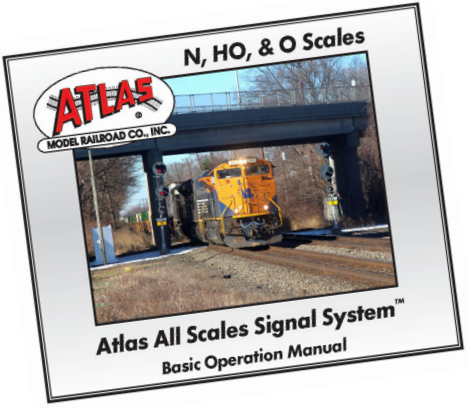

WARRANTY

For warranty information visit http://warranty.atlasrr.com

CAUTION

To ensure proper operation and prevent potential damage to the Interlock Control Module, your layout, or yourself, you should follow a few common sense steps to protect you and the system against electrical shock when working with these components:

1) Always make sure your power source is turned OFF when handling, installing, and wiring or attaching cables or signals into the Interlock Control Module.

2) Do not apply excessive force when connecting or disconnecting cables, and make sure to leave some slack in the wiring so that strain is not placed on the connections, as wires may pull loose from the plugs and cause intermittent failures.

3) Ensure that your power source is properly grounded. Attach all ground connections to components before attaching the positive power leads.

4) Make sure that the power supply does not exceed 22V AC or DC.

5) Ensure that all wires are properly insulated, and that all connections are secure.

6) Before handling any circuit board, discharge any static electricity you may have accumulated by touching a grounded metal surface, such as a cold water pipe. This will reduce the chance of damaging the integrated circuit components on the board through an electrostatic "shock".

7) When working with the circuit board, keep it in its electrostatic bag until you are ready to install it, and then hold it by the edges, not the electronic components!

8) Always remember to turn the power OFF when you are not using the system.

ATLAS®
MODEL RAILROAD CO., INC.

Atlas Model Railroad Co., Inc.• 378 Florence Avenue • Hillside • NJ • 07205 • www.atlasrr.com •908-687-0880